Installation, Operation and Maintenance Manual

PROVAL A210-211-212-213-Series

Rack and Pinion Pneumatic Actuators

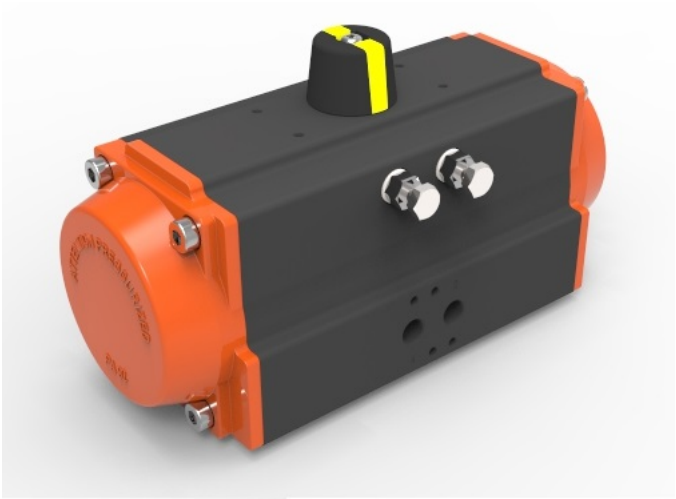

Table of Contents

Section 1: Before You Start

1.1 Installation, Operation and Maintenance Reference Documents 1
1.2 Warehouse Storage 1
1.3 On-Site Storage 2

Section 2: Introduction

2.1 Identification 3
2.2 Intended Use 4
2.3 Specifications 4

Section 3: Product Code

3.1 Configuration code for a default actuator 6

Section 4: Installation

4.1 Before You Start 7
4.2 Failure Modes 7
4.2.1 Valve Rotation 7
4.2.2 Position After Failure 8
4.3 Principles of Operation 8
4.3.1 Solenoid Valve 8
4.3.2 Ingress Protection (IP) rating 9
4.3.3 Double-Acting Actuators 10
4.3.4 Spring-Return Actuators 11
4.4 Actuator Assembly Codes 12
4.5 Actuator to Valve Installation 13
4.6 Mounting of control and feedback accessories 15
4.7 Recommended Tubing Sizes 16

Section 5: Mechanical Stroke Adjustment

5.1 Travel Stop Adjustment 18
5.1.1 Double-Acting Actuators 18
5.1.2 Spring-Return Actuators 18

Section 6: Maintenance

6.1 General 20
6.2 Repair 20
6.2.1 Spring-Return actuator 20
6.2.2 Recommended Spare Parts 20

Section 7: Decommission (Out of Service)

7.1 Before You Start 22
7.2 Removing the actuator from the valve 23

Section 8: Disassembly

8.1 Removing End Caps 25
8.2 Removing Spring Cartridges (Spring-Return) 26
8.3 Removing of Limit Stop 27
8.4 Removing Pistons 27
8.5 Removing Pinion 28
8.6 Cleaning the Body 28

Section 9: Reassembly

9.1 Grease Instructions 30
9.2 Reassembly of the pinion 31
9.3 Reassembly of the pistons 32
9.4 Reassembly and settings of the limit stops 34
9.5 Reassembly of the end caps 34
9.5.1 Double-Acting actuators 34
9.5.2 Spring-Return actuators 36
9.6 Basic function and Air Leak Test 38

Section 10: Troubleshooting

10.1 Mechanical Problems 39
10.2 Pneumatic Problems 40
10.3 Electrical Problems 41

Section 11: Parts List and Spare Parts Recommendations

11.1 Exploded View and Parts List 42

Appendix A: Spring load removal

A.1 Spring load relief 43

Appendix B: Tool & Torque Table

» Table B-1 End cap bolts 45
» Table B-2 Bottom Flange 45
» Table B-3 NAMUR (VDE/VDI 3845) flanges 46
» Table B-4 Limit stop dimensions 46
» Table B-5 Recommended circlip pliers 46

Section 1: Before You Start

This section explains:

- Base safety procedures
- Where to find detailed information relating safety.
- Storage guidelines.

Installation, adjustment, putting into service, use, assembly, disassembly and maintenance of the pneumatic actuator must be performed by qualified personnel.

⚠ NOTICE

Failure to follow the above guidelines will void warranty.

⚠ WARNING

Actuator must be isolated both pneumatically and electrically before any (dis)assembly starts. Before mounting or (dis)assembly, the actuator consults the relevant sections of this manual.

1.1 Installation, Operation and Maintenance Reference Documents

Before you start, read the following documents:

- All chapters in this manual.
- Safety Guide (Document No. TL.32.A210-SG.EN).

⚠ NOTICE

Failure to read the Safety Guide will void the warranty.

Not following the instructions of the Safety Guide can lead to failure of the product and harm to personnel or equipment.

1.2 Warehouse Storage

- All actuators should be stored in a clean, dry warehouse, free from excessive vibration and rapid temperature changes.
- All actuators should not be stored directly to the floor surface - it must be placed in racks/shelves or use a pallet.

1.3 On-Site Storage

- All actuators should be stored in a clean, dry warehouse, free from excessive vibration and rapid temperature changes.
- Prevent moisture or dirt from entering the actuator. Plug or seal both air connection ports.

⚠ NOTICE

Failure to follow the above guidelines (Warehouse and On Site Storages) will void warranty.

Section 2: Introduction

This section explains:

- How to identify the received product,
- The intended use of the product
- Construction details
- Actuator specifications

2.1 Identification

The A210-211-212-213 Series Rack and Pinion actuators are available as double-acting or spring-return versions. 15 models are available, ranging from 9 Nm to 3500 Nm (80 to 31000 lbf.in) nominal torque output.

The A210-211-212-213 Series-Series uses standardized interfaces for solenoid, switchbox or positioner mounting (VDI/VDE3845; NAMUR). The valve interface is equipped with an insert in the pinion bottom that allows both ISO5211 or DIN3337 mounting.

The springs in the spring-return version allow a fail action in case of loss of air supply pressure (Fail-to-Close or Fail-to-Open).

As from size PA032 and PA040 double-acting versions have flat end caps to reduce actuator length and internal air volume.

Figure 1 Identification

1. Top auxilliaries interface (VDI/VDE 3845; NAMUR)
2. Solenoid interface (VDI/VDE 3845; NAMUR)
3. Valve interface with ISO5211, DIN 3337 patterns and insert drive
4. Spring-return actuators: - with springs
5. Double-acting actuators: - no springs

2.2 Intended Use

The A210-211-212-213 Series Rack and Pinion actuators are intended for the automation and operation of quarter-turn valves like Butterfly, Ball and Plug valves.

Rack and Pinion actuators can also be used to operate dampers or any other quarter-turn applications.

2.3 Specifications

Table 1. Pressure Range

Actuator Type	Pressure
Double-Acting	0.2 to 8.3 barg (2.9 to 120 psig)
Spring-Return	6 to 8.3 barg (87 to 120 psig), with maximum spring set
	3 to 8.3 barg (43.5 to 120 psig), reduced spring quantity

Table 2. Operating Media

Actuator Type	Operating Media
Double-Acting and Single-Acting	Air, dry or lubricated and inert gases
	Dew point at least 10K below ambient temperature
	For sub-zero applications, take appropriate measures
	Mentioned pressure levels are "gauge pressures". Gauge pressure is equal to absolute pressure minus atmospheric pressure.

Table 3. Temperature Range

Actuator Type	Temperature
Standard	-20°C to +80°C (-4°F to +176°F)
Option: Low Temperature	-40°C to +80°C (-40°F to +176°F)
Option: High Temperature	-20°C to +150°C (-4°F to +302°F)

Table 4. Air Consumptions of Actuators(Lt/Stroke)

Model	PA 32	PA 40	PA 52	PA 63	PA 75	PA 83	PA 92	PA 105	PA 125	PA 140	PA 160	PA 190	PA 210	PA 240	PA 270
Opening (Lt)	0,03	0,06	0,12	0,21	0,30	0,43	0,64	0,88	1,4	2,2	3,2	5,4	6,8	9	14
Closing (Lt)	0,04	0,08	0,16	0,23	0,34	0,47	0,73	0,95	1,6	2,5	3,7	5,9	7,5	11	17

Counter Clockwise Rotation (CCWR) Air supplied through port B forces the piston towards each other causing the pinion to rotate clock wise while air is being exhausted through port A.

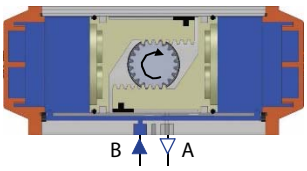

Air supplied through port A forces the piston away from each other causing the pinions to rotate counter clockwise while air is being exhausted through port B.

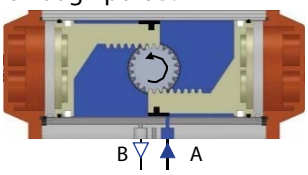

Clockwise Rotation (CWR) Air supplied through port B forces the piston towards each other causing the pinion to rotate counter clockwise while air is being exhausted through port A.

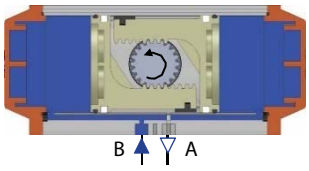

Air supplied through port A forces the piston away from each other causing the pinions to rotate clockwise while air is being exhausted through port B.

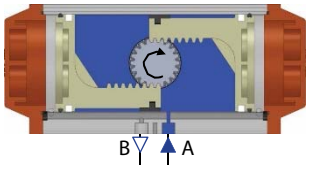

The Proval actuators typically operate counter clockwise to open and clockwise to close. The direction of pinion rotation (CCW to CW) can be reversed changing the orientation of pistons as shown in the picture above.

Section 3: Product Code

This section explains:

- How to create the configuration code for a default actuator.
- How to create the configuration code for an actuator with added integral options.

PA 0 S 50 D 22 G H W E N . Y G

- End-Cap Color
- Body Finish
- Seal Material
- ISO Flange Connection
- Rotation Direction
- Spring Type
- Pinion Material
- Stem Connection Size
- Valve Stem Connection Type
- Size
- Acting Type
- Series
- Type

Type	
PA	Pneaumatic Actuator

Series	
0	A210
1	A211
2	A212
3	A213
4	A214

Acting Type	
D	Double Acting
S	Spring Return

Size	
10	032
15	040
20	052
25	063
30	075
35	083
40	092
45	105
50	125
55	140
60	160
65	190
70	210
75	240
80	270

Valve Stem Connection Type	
Y	Double Square
D	Diagonal Square
K	Parallel Square
S	Double D

Stem Connection Size	
09	9mm
11	11mm
14	14mm
17	17mm
22	22mm
27	27mm
36	36mm
46	46mm
xx	Upon Request

Pinion Material	
G	Galvanized
P	Stainless Steel
N	Nickel Plated

Stem Connection Size	
A	9mm
B	11mm
C	14mm
D	17mm
E	22mm
F	27mm
36	36mm
46	46mm
xx	Upon Request

Spring Type	
N/A	Double Acting
A	5
B	6
C	7
D	8
E	9
F	10
G	11
H	12

Rotating Direction	
C	Open/Clockwise
W	Open/Counterclockwise

ISO Flange Connection	
A	F3
B	F3/F5
C	F3/F5/F7
D	F5/F7
E	F7/F10
F	F10/F12
G	F14
H	F16
I	F4
J	F4/F7

Seal Material	
N	NBR
V	Viton

Body / End-Cap Finish			
A	RAL.9005 Piano Black	L	RAL.9010 Glossy White
B	RAL.9005 Matte Black	M	RAL.1006 Glossy Yellow
C	RAL.2004 Glossy Orange	N	RAL.9006 Glossy Dark Gray
D	RAL.7035 Glossy Light Gray	V	White Anodized
E	RAL.3000 Glossy Red	Y	Black Anodized
F	RAL.6026 Glossy Green	Z	PTFE
G	RAL.5005 Glossy Blue	S 1	AISI304 Stainless Steel
H	RAL.5018 Glossy Turquoise	S 2	AISI316 Stainless Steel
J	RAL.5015 Glossy Light Blue	S 3	AISI305 Stainless Steel
K	RAL.9007 Glossy Silver		

Section 4: Installation

This section explains:

- The actuator rotation direction.
- In which position the actuator will end after a failure.
- Principles of operation:
  - Solenoid operation
  - Double acting and Spring return operation
- Assembly codes.
- Actuator to valve assembly.

4.1 Before You Start

⚠ SAFETY FIRST

In case of an air or electrical failure, it is important to know the behavior of the actuator. Before mounting the actuator on a valve, consult the following sections below.

4.2 Actuator Rotation Direction

4.2.1 Valve Rotation

For the following paragraphs we assume that valves rotate as indicated in figure 3.

Figure 3 Normal valve rotation

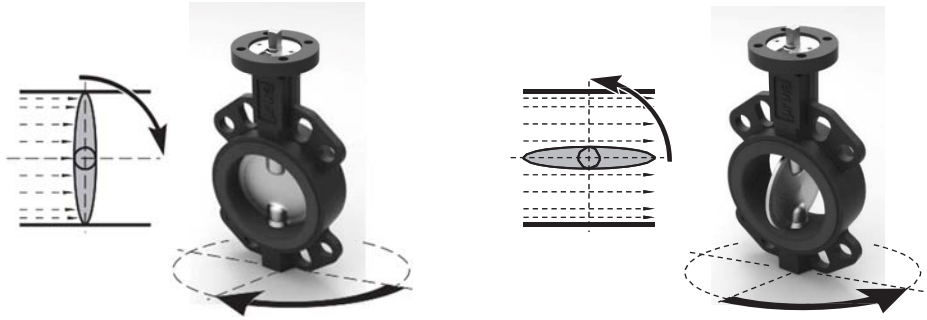

The valve is closed after a clockwise rotation.

The valve is open after a counterclockwise rotation.

4.2.2 Position After Failure

The position of the actuator after a failure depends on the:

1. Principle of operation (see paragraph 4.3)
2. Assembly codes (see paragraph 4.4)
3. Kind of failure. Refer to the table below.

Table 5. Position After Failure

Principle of Operation	Assembly Code	Kind of Failure	Position
Double-Acting Actuator	C	Pressure	Not defined
		Signal	Closed
		Supply Voltage	Closed
	W	Pressure	Not defined
		Signal	Open
		Supply Voltage	Open
Single-Acting (Spring-Return) Actuator	C	Pressure	Closed
		Signal	Closed
		Supply Voltage	Closed
	W	Pressure	Open
		Signal	Open
		Supply Voltage	Open

4.3 Principles of Operation

4.3.1 Solenoid Valve

All actuators can be either piped with solid or flexible tubing with the solenoid valve mounted remotely from the actuator or by mounting a VDI/VDE 3845 (NAMUR) designed solenoid valve DIRECTLY onto the NAMUR mounting pad on the side of the actuator

Figure 4 Typical solenoid operation

Spring-Return Operation

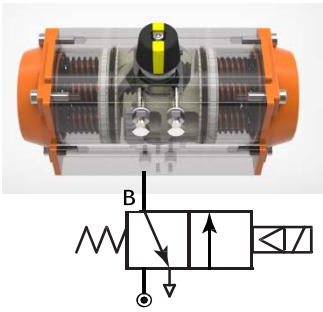

Double-Acting Operation

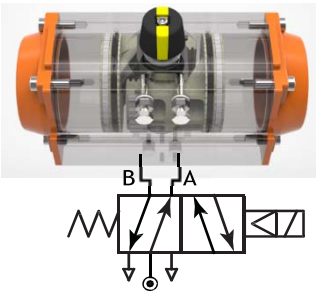

The table below represents the cycle time (operating time) per different Actuator sizes:

Table 6. Operating Speed

Cycle time in seconds				
Actuator size	Spring-Return(12springs)		Double-Acting	
	0°-90°	90°-0°	0°-90°	90°-0°
PA32	N/A	N/A	0.5	0.4
PA40	N/A	N/A	0.55	0.47
PA52	2.66	0.44	0.6	0.53
PA63	2.74	0.52	0.66	0.58
PA75	2.83	0.61	0.72	0.64
PA83	3.01	0.74	0.83	0.73
PA92	3.26	0.79	1	0.86
PA105	4.36	1.08	1.35	1.3
PA125	4.68	1.22	2.4	1.79
PA140	4.84	1.65	2.5	2.1
PA160	5.83	3.4	3.93	2.6
PA190	8.5	4.5	4.55	3.45
PA210	17	4.84	5.5	4.35
PA240	18.4	6.14	8.4	8.33
PA270	24.9	12.54	10.9	8.53
PA300	31.6	16.54	15	14.9

Operating time is average with actuator under load and solenoid valve fitted.

Test conditions:

1. Solenoid with flow capacity: 0.6 m^3/hr
2. Pipe diameter: 6mm
3. Medium: clean air
4. Supply pressure: 5.5 bar (80psi)
5. Load: with average load
6. Stroke: 90°
7. Temperature: Room temperature

4.3.2 Ingress Protection (IP) rating

A210-211-212-213 Series actuators are IP66/IP67 rated. In case of IP66 or IP67 requirements, take precautions that comply with the IP66/IP67 requirements to prevent moisture or dust from entering the actuator through the open air exhaust port(s), either directly on the actuator or at the exhaust ports of the connected solenoid valve.

We recommend to connect tubing to the exhaust(s) and lead this into a dry and dust free area, or to use check valves in the exhaust.

4.3.3 Double-Acting Actuators

The operating principle, as explained here, is applicable for actuators with assembly code W (direct acting).

- Applying supply pressure to port A will move the pistons outward to the "Open" position of the valve.
- Applying supply pressure to port B will move the pistons inward to the "Close" position of the valve.
- For assembly codes C, the operating principle is reversed (reverse acting).

Figure 5 Double-Acting Operation

Outward Stroke

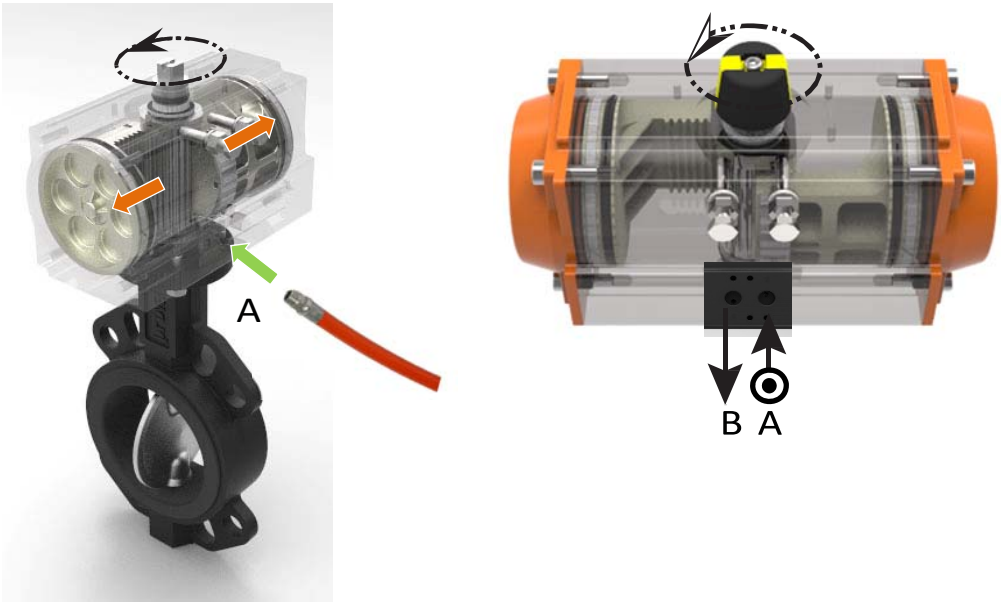

Inward Stroke

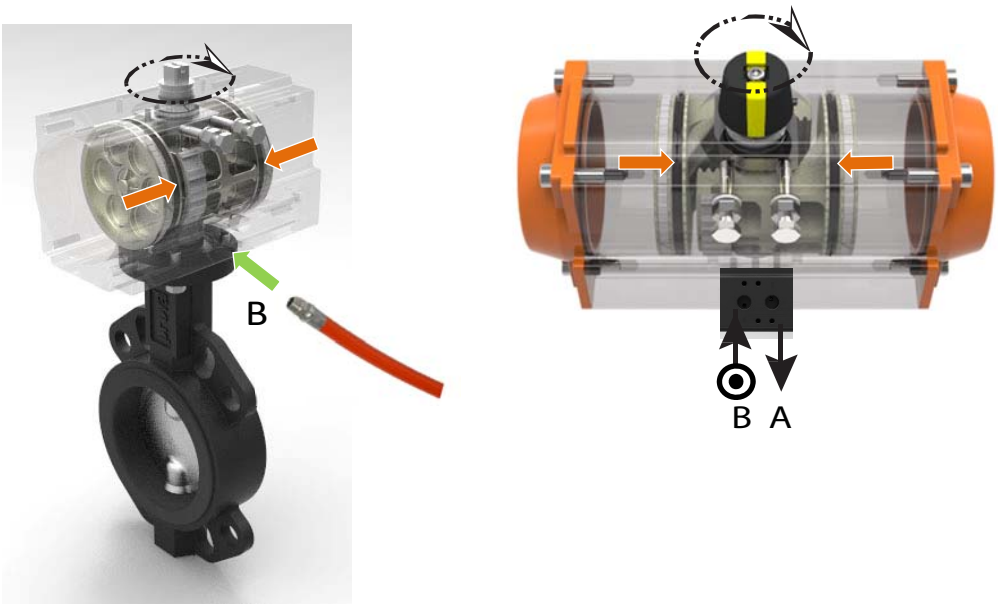

4.3.4 Spring-Return Actuators

The operating principle, as explained here, is applicable for actuators with assembly code C (direct acting).

- Applying supply pressure to port A will move the pistons outwards to the "Open" position of the valve.
- Venting the supply pressure from port A will cause the springs to move the pistons inwards to the "Close" position of the valve.
- For assembly codes W, the operating principle is reversed (reverse acting).

Figure 6 Stroke Movements

Outward Stoke

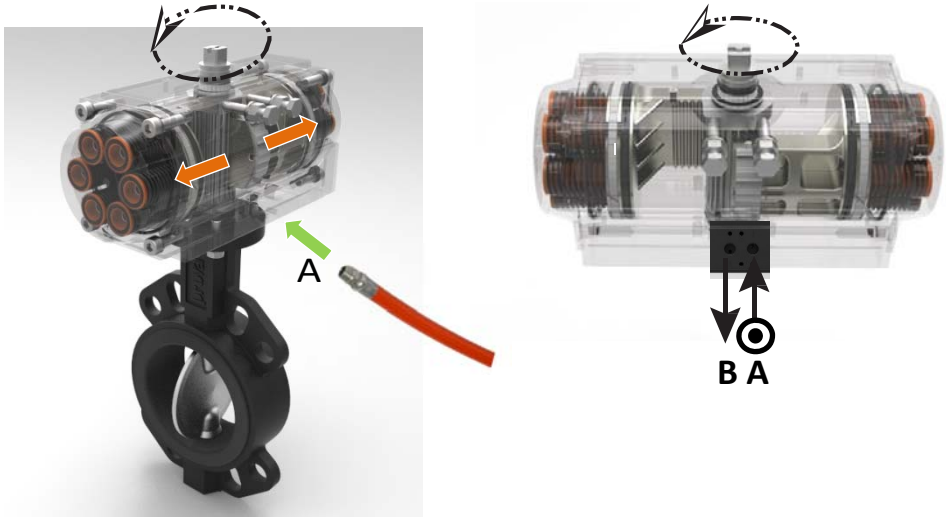

Inward Stroke

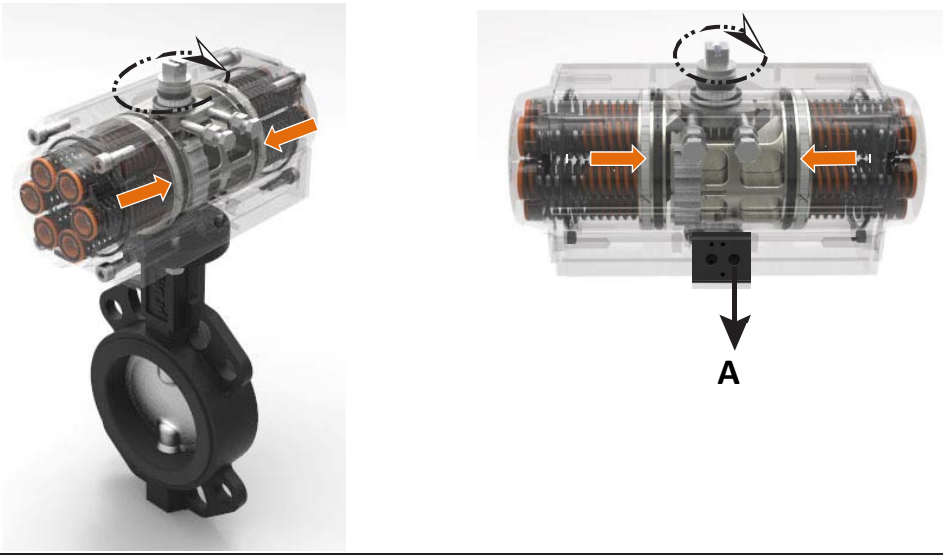

4.4 Actuator Assembly Codes

Figure 7 Assembly Code - Double-Acting

Assembly code: W

= Standard, Counterclockwise-to-Open

= Fail-to-Close

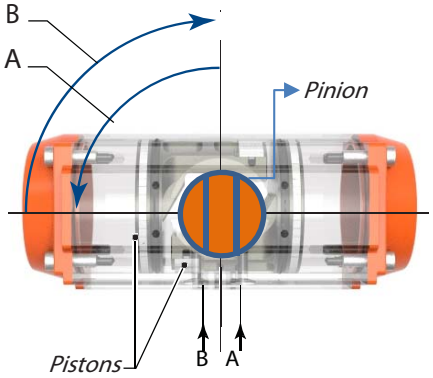

Assembly code: C

= Reverse, Clockwise-to-Open

= Fail-to-Open

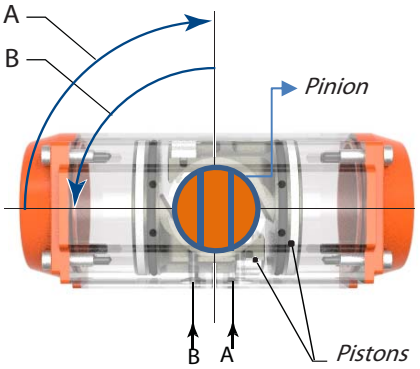

A = Rotation when central air chamber is pressurized.

B = Rotation when end cap air chambers are pressurized.

All views are from above. Pistons are shown in inward position.

4.5 Actuator to Valve Installation

⚠ WARNING - MOVING PARTS

Actuator must be isolated pneumatically and electrically before any (dis)assembly starts.

Stay away from moving parts to prevent serious injuries. When test cycling the actuator and valve assembly by applying pressure to the A or B port, be aware that there are moving parts like pinion top, actuator to valve coupling and the valve- blade, ball, plug, etc.

⚠ NOTICE

The actuator is designed to be installed, commissioned and maintained using generic tools like wrenches, Allen keys and screwdrivers. For the removal of inserts, a special extractor tool can be supplied on request.

During assembly to the valve, do not hit with hammer on pinion top. This can damage the pinion top washer and cause premature failure.

Before mounting the actuator on the valve or valve bracket, be sure that both the actuator and the valve are in the same closed or open position.

Refer to appendix B, Tool and Torque tables, for using the right size tool

Table 7. Tool Table

Symbol	Tool	Symbol	Tool
	Wrench – All types and sizes. Metric and Imperial		Allen key
	Circlip Pliers		

1. Remove handle nut, handle, lock washer, and etc. from the valve if required.
2. Visually check to make sure the valve is CLOSED.

Figure 9 Valve handle removal

3. When required, check if the insert drive (23) is mounted. If not, use a plastic mallet and tap slightly until the reducer square is in the required position.
Be sure that the insert is mounted at 90° or 45°. It is possible to mount the insert turned 22.5°. This way the valve will not open or close the right way.

Figure 10 Insert drive Installation

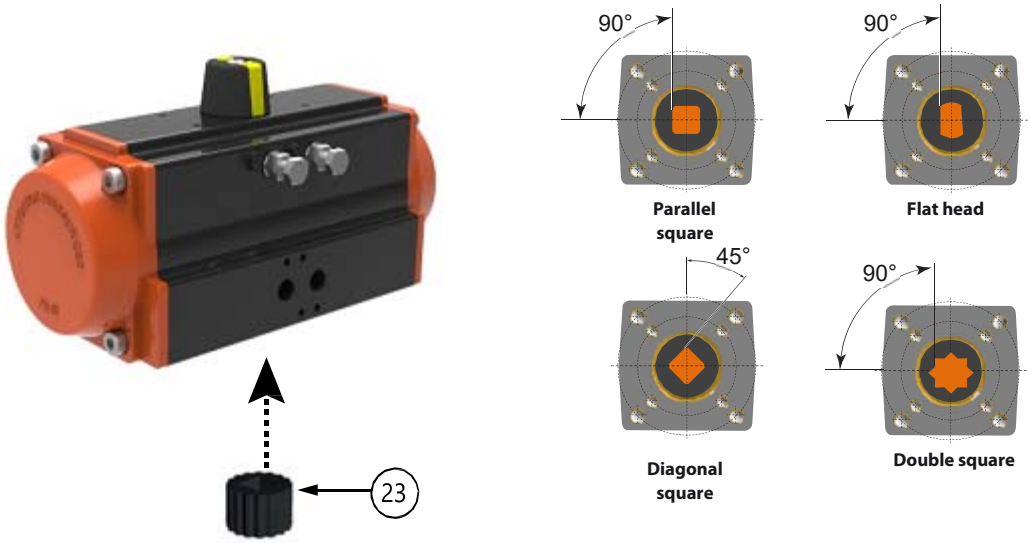

4. Install the bracket to the valve flange. Tighten all bolts and nuts and apply the correct torque.

Figure 11 Bracket Installation

5. Install the actuator to the bracket. Tighten all bolts and apply the correct torque (refer to Table 8).

Table 8. Bottom flange torque values

Actuator Size	ISO Pattern	Torque (Nm)			Torque (lbf.ft)		
		Thread	Min.	Max.	Thread	Min.	Max.
32	F03	M6	4.5	5	10-24UNC	3.3	3.7
40, 52	F03 inner pattern	M5	2.0	3.0	10-24UNC	1.5	2.2
	F05 outer pattern	M6	4.5	5.0	1/4"-20	3.3	3.7
63, 75, 83, 92	F05 inner pattern	M6	4.5	5.0	1/4"-20	3.3	3.7
	F07 outer pattern	M8	10.5	12.5	5/16"-18	7.7	9.2
105, 125	F07 inner pattern	M8	10.5	12.5	5/16"-18	7.7	9.2
	F10 outer pattern	M10	21.0	24.5	3/8"-16	15.5	18.1
140, 160	F10 inner pattern	M10	21.0	24.5	3/8"-16	15.5	18.1
	F12 outer pattern	M12	34.5	43.0	1/2"-13	25.4	31.7
190, 210, 240, 270, 300							

6. When required, mount or adjust the visual indicator (22).

Figure 12 Indicator mounting

"In Line mounting" "Across Line mounting"

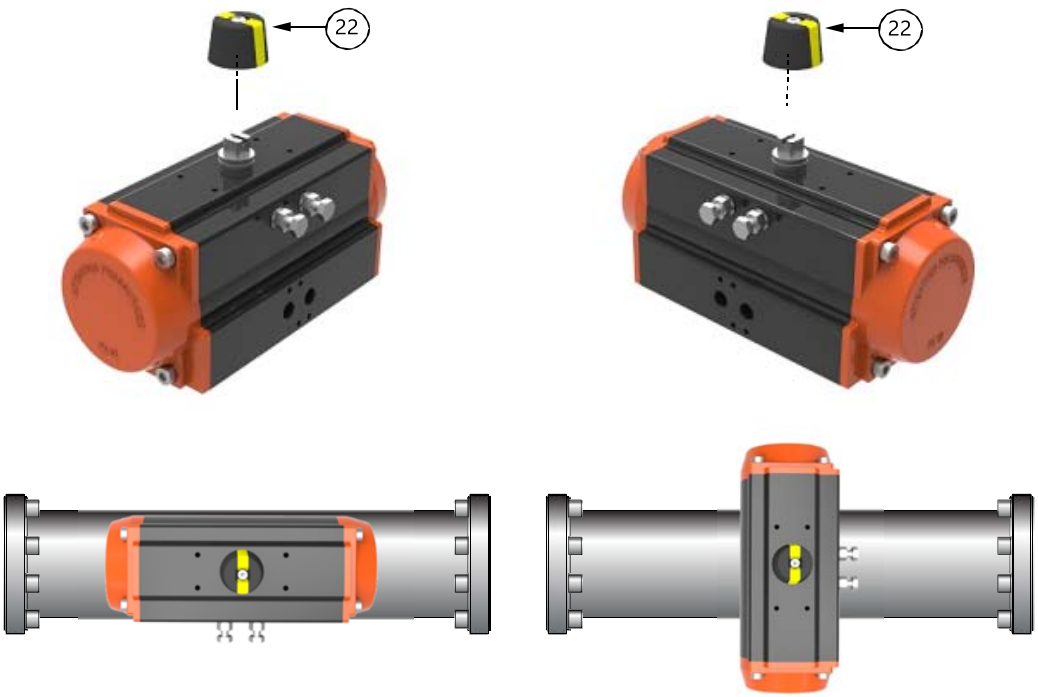

4.6 Mounting of control and feedback accessories

Solenoid valve and or switch boxes can now be mounted to the actuator. Check the instructions as shipped with these components for installation, operating and maintenance instructions.

We recommend to test-cycle the complete assembly to check correct operation.

4.7 Recommended Tubing Sizes

In case the solenoid valve is mounted remotely (i.e. in a central solenoid cabinet) and in order to supply sufficient flow of air supply to the actuator, the following tubing sizes are recommended.

Table 9. Tubing Sizes

Actuator size	Runs up to		Runs over to	
	1.2 meters	4 feet	1.2 meters	4 feet
32, 40, 52, 63, 75, 83, 92	6 mm	1/4 inch	6 mm	1/4 inch
105, 125, 140, 160	6 mm	1/4 inch	8 mm	5/16 inch
190, 210, 240, 270, 300	6 mm	1/4 inch	10 mm	3/8 inch

Section 5: Mechanical Stroke Adjustment

This section explains:

- What the mechanical stroke adjustment is.
- What the factory settings are.
- How to adjust the travel stops.

A210-211-212-213 Series actuator sizes 32 to 300 have two stroke adjustment stops for adjusting accurately the stroke of the actuator/valve assembly in open and closed position.

The smallest actuator, size 32, have limit stops on end-caps.

The factory setting of the stroke is 90°. Most quarter-turn valve applications will not require readjustment of these settings.

If required, the stroke can be adjusted by means of two-stroke adjustment bolts.

Figure 13 Factory Setting

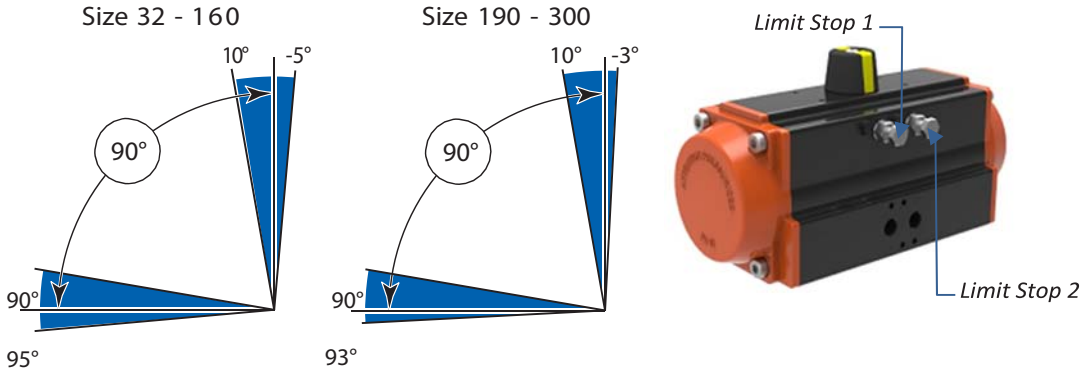

5.1 Travel Stop Adjustment

⚠ CAUTION - PRESSURIZED ACTUATOR

Do not turn out the travel stops completely when the actuator is pressurized.

When adjusting the travel stops and the actuator is still pressurized, the travel stops can be "shot" away when completely turned out.

5.1.1 Double-Acting Actuators

1. Operate valve/actuator assembly to the required "Closed" position.
2. Remove air supply.
3. Slacken locknut on the "closed" stop (2).

Figure 14

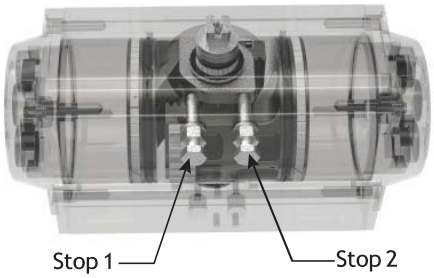

4. Turn the "closed" stop clockwise to reduce or counterclockwise to increase the travel. Consult chapter 5.1.3 (angular displacement of the pinion), to define how far the limit stop must be turned in or out.
5. Tighten the lock nut.
6. Connect air and cycle the actuator to check that the position is correct. If not repeat from 2.
7. Remove air supply.
8. For adjusting the open position repeat steps 1 to 7, but now for the open position and "open" stop (1).

5.1.2 Spring-Return Actuators

1. Connect air supply to the A port. Actuator will move to the open position.
2. Slacken locknut on the "closed" stop (2).

Figure 15

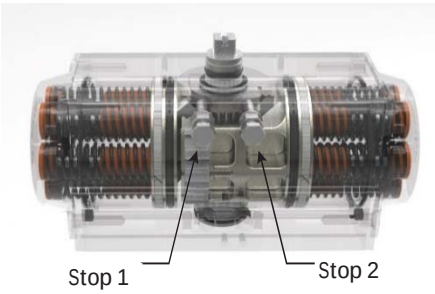

3. Turn the “closed” stop clockwise to reduce or counterclockwise to increase the travel. Consult chapter 5.1.3 (angular displacement of the pinion), to define how far the limit stop must be turned in or out.
4. Remove air supply. Actuator will move to the closed position.
5. Check whether the actuator valve assembly is in the required position. If not repeat steps 1 to 5.
6. Remove air supply.
7. For adjusting the open position repeat steps 1 to 6, but now for the open position and "open" stop (1).

Table 10. Limit stop dimensions

Actuator size	Thread	Bolt Wrench size (mm)	Nut wrench size (mm)
32	M 5	20(stay bolt)	8
40	M 6	25	10
52	M 6	30	10
63	M 6	30	10
75	M 8	35	13
83	M 8	45	13
92	M 8	40	13
105	M 8	40	13
125	M 10	50	17
140	M 12	60	19
160	M 16	70	24
190, 210, 240, 270, 300			

1. Default dimension according DIN933 standard.
2. Dimensions in brackets according ISO4017 standard.
3. Actuator size 32 is available with end-cap limit stops.

Section 6: Maintenance

This section explains:

- When and how to do maintenance.
  - Normal maintenance
  - Extraordinary maintenance
- What to do when replacing springs.
- What the availability is of spare parts, action conversion kits and temperature conversion kits.

⚠ WARNING

Actuator must be isolated pneumatically and electrically before any (dis)assembly starts. Before mounting or (dis)assembling the actuator, consult the relevant sections of this manual.

6.1 Normal Maintenance

A210-211-212-213 Series actuators are designed to operate without maintenance for their normal working life. Normal working life is 1,000,000 cycles.*

We recommend regular inspections to make certain that the actuator / valve assembly operates smoothly and to check that there are no visible or audible defects. We advise to perform the following checks upon each proof test interval complying with the rules and regulations of the country of final installation:

- Visually check the entire actuator as well as the control system (where foreseen).
- Ensure there are no leaks on the actuator parts under pressure.
- Check pneumatic connections for leaks. Tighten tube fittings as required.
- Check if manual override (where foreseen) is regular.
- Check if pneumatic filter cartridge (where foreseen) is sound and filter bowl (where foreseen) has been cleaned properly.
- Check the setting of the relief valves (where foreseen).
- Verify that the power fluid supply pressure value is within the required range.
- Remove built-up dust and dirt from all actuator surfaces.
- Inspect actuator paint work for damages to ensure continued corrosion protection. Touch-up as required in accordance with the applicable paint specification.
- Operate the Actuator/Valve assembly for No 2 open/close complete cycles with complete closing of the valve.
- Verify the correct performing of open – close operations (e.g. check locally, or automatically via Logic solver, the correct movement of the actuator).

All actuators are supplied with sufficient lubrication for their normal working life. If required, see Section 9.1 (Grease instructions) for the recommended grease.

For mounting the parts of the repair kit follow the instruction of the Decommission, Disassembly and Reassembly chapters of this manual.

Note:

*Cycles = one open stroke and one close stroke.

6.2 Inspection and Repair

Replacement of internal seals and bearings allows to you extend the normal working life. Service kits, containing all necessary spare parts (like seals, bearings, grease and instructions) can be obtained through authorized PROVAL distributors.

6.2.1 Service Kits

All soft seals, bearings, and nonreusable parts are included in the recommended service kit. The service kit is identical for both the double-acting and the spring-return models.

6.2.2 Spring-Return Actuator

For the spring-return models, we recommend a set of spare springs for each different model in addition to the recommended spare parts kit.

On spring-return actuators, the spring cartridges can be replaced. SPRING CARTRIDGES SHOULD ALWAYS BE REPLACED IN COMPLETE SETS. Spring kits are available through authorized PROVAL distributors.

Section 7: Decommission (Out of Service)

This section explains:

- How to decommission an actuator in a safe way.

7.1 Before You Start

⚠ WARNING - MOVING PARTS

Actuator must be isolated pneumatically and electrically before any (dis)assembly starts. Before mounting or (dis)assembling the actuator consult the relevant sections of this manual.

Actuator can move when removing supply pressure and/or electrical control signal of actuators. If not already there, a spring-return actuator will cycle to its fail position.

When removing any ball valve or plug valve assemblies from a pipe system, isolate the piping system on which the Actuator is installed and relieve any media pressure that may be trapped in the valve cavities before removing the actuator for maintenance.

A spring-return actuator mounted on a valve, which is stuck in mid stroke, contains a high spring load which will cause a sudden rotation of the actuator versus the valve or valve bracket during disassembly. This can cause serious injury to personnel or damage to property.

Refer to Appendix A for instructions to safely remove the spring load before disassembling the spring-return actuator from valve or bracket.

Important

Refer to the Safety Guide for Lifting Instructions.

7.2 Removing the actuator from the valve

1. Disconnect all air supply hoses (Ports A and B or solenoid).
2. Disconnect all electrical wirings of the switch box.
3. Disconnect the electrical wiring of the solenoid valve.
4. Remove the bolts and nuts from the valve flange.
5. Remove the bracket from the actuator.
6. Remove the switch box and solenoid valve. Refer to the documentation of the switch box and solenoid valve for safe disassembly.

Figure 16 Removing actuator from valve

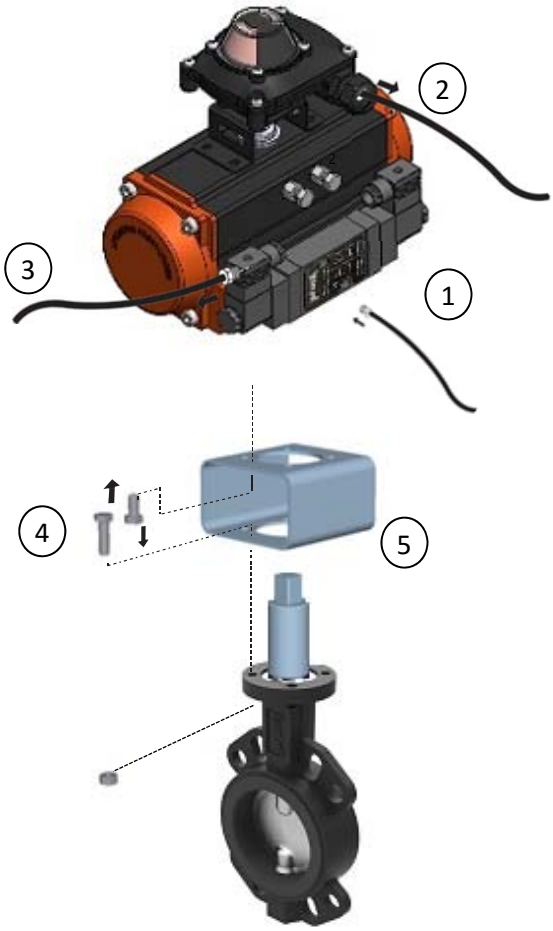

Section 8: Disassembly

This section explains:

- How to disassemble an actuator safely.

Tip

The instructions of this section can be used for maintenance or reconfiguration like spring set change or maintenance.

Reference numbers for components refer to the exploded view in section 11.

In case of maintenance, discard all the used soft parts like O-ring seals, guide bands, wear strips and circlip.

⚠ WARNING

Actuator must be isolated pneumatically and electrically before any (dis)assembly starts.

Before mounting or (dis)assembling the actuator consult the relevant sections of this manual.

⚠ CAUTION - SPRING FORCE

Spring-return actuators contain springs in a compressed state. Follow these instructions to release the spring force safely.

Normally the end caps of spring-return actuators should be free of the spring load after 10 full turns (crosswise relaxing) of the end cap screws. If there is still spring load on the end cap, this might indicate a broken spring cartridge. Stop this disassembly procedure immediately. Continuing might cause the end cap to be “shot” away causing serious injury.

Refer to Appendix A for instructions to safely remove the spring load before disassembling the end cap of a spring-return actuator with a broken spring cartridge.

NOTICE

The actuator is designed to be installed, commissioned and maintained using generic tools like wrenches, Allen keys and screwdrivers.

Refer to the tables in this section or refer to appendix B Tool and Torque tables.

8.1 Removing End Caps

1. For Double-acting actuators, do the following:
   a. Loosen the screws (26) of the end caps (25).
   b. Remove the o-ring (24) and "B" port seal (14). Discard these parts.

Figure 17 Double-Acting End Caps Removal

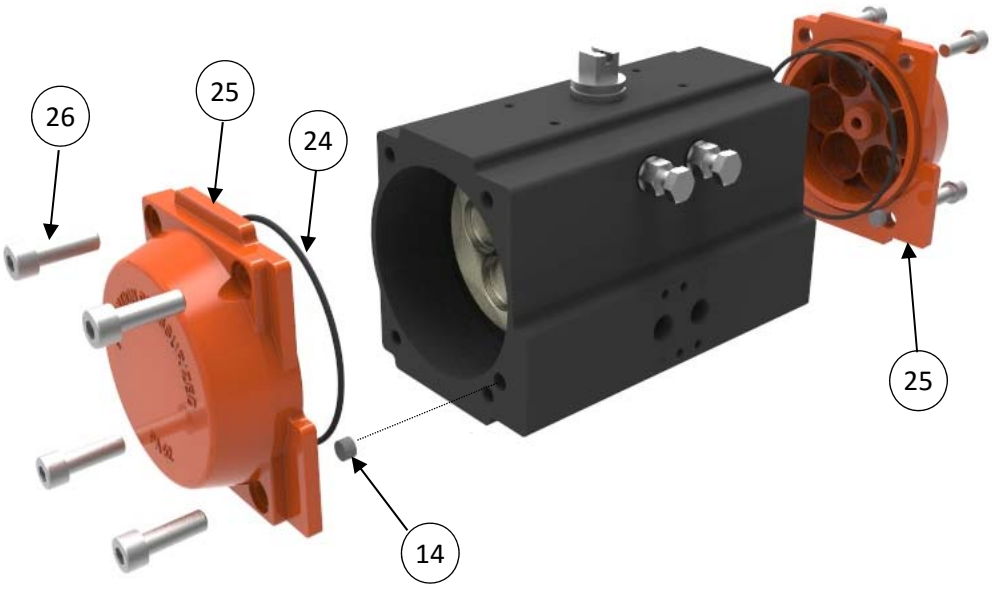

The above end caps (2) are for all Actuator sizes except 32.

End caps (2) for Actuator size 32 have limit stop screwed flat end caps (see below).

2. For Spring-return actuators, do the following:
   a. Tip: For actuators with assembly code C, turn back the right hand limit stop screw (18) 2 full turns.
   For actuators with assembly code W, turn back the left hand limit stop screw (18) 2 full turns.
   This will lower the spring force on the end cap and reduces the screw out length of the end cap screws.
   b. Important: Apply a strong, sudden rotational and downward force to loosen all the end cap screws (26) for maximum 1/4 turn.
   c. Uniformly loosen the screws (26) of the end caps (25) 1/4-1/2 turns at a time, in sequence, as per figure 18, to relieve the pre-load of the springs.
   d. Remove the o-rings (24) and "B" port seals (14). Discard these parts.

Figure 18 Spring-Return End Caps Removal

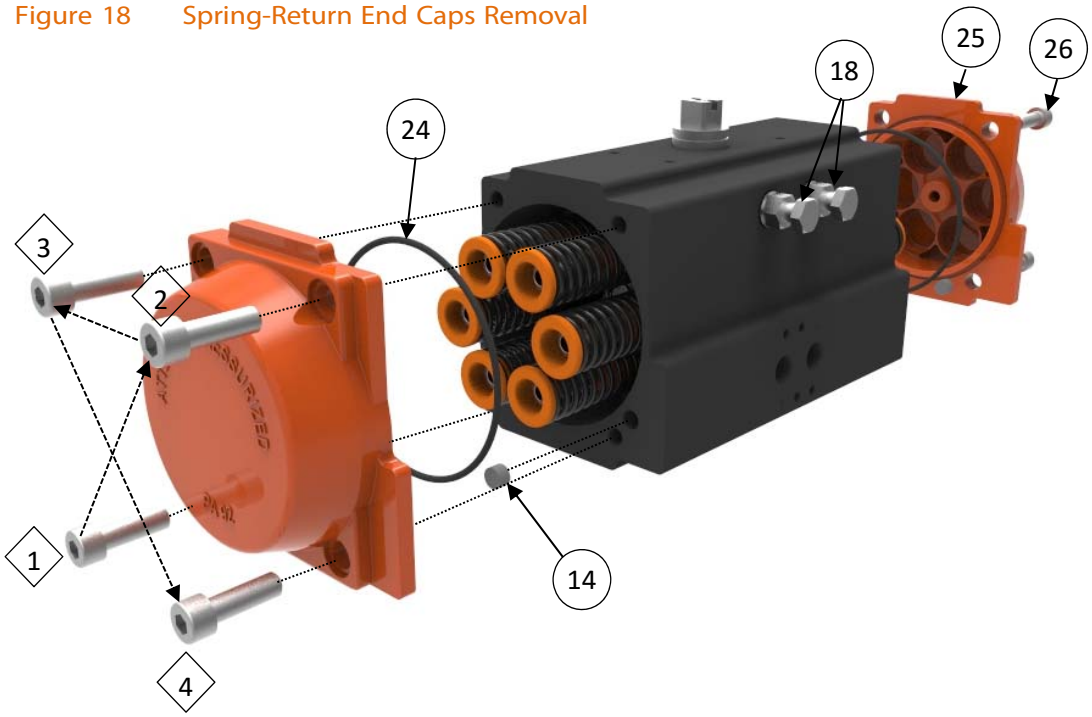

8.2 Removing Spring Cartridges (Spring-Return)

1. Remove the spring cartridges (23).

Figure 19

8.3 Removing of Limit Stop

1. Remove the limit stop screws (18), limit stop nuts (17), limit stop washers (16) and limit stop o-rings (15). Discard the o-rings.

Figure 20 Limit Stop Removal

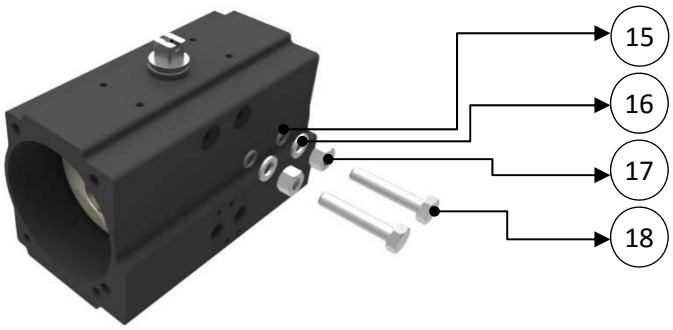

8.4 Removing Pistons

1. Use a wrench and turn the pinion counterclockwise (180°) until the pistons (19) comes out of the body.
2. Remove the piston bearings (22), piston rack bearing strips (20) and piston o-ring seals (21). Discard these parts.

Figure 21 Piston Removal

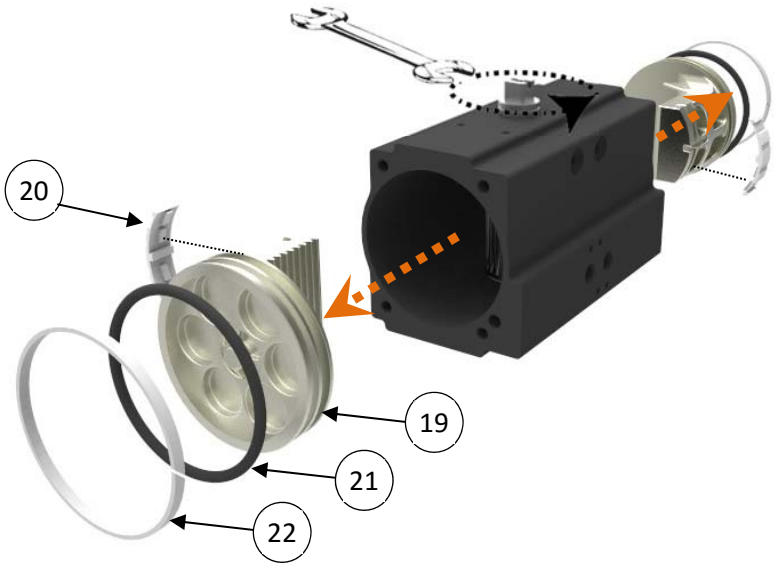

8.5 Removing pinion

1. Remove the circlip (3) and thrust washers (4-5) on top of the pinion assembly. Discard if necessary the circlip (3) and thrust washers (4-5).
2. While removing the pinion (11) by pushing it downwards, remove cam(8) and washer(7).
3. Remove the pinion o-ring seals (10-13) and the pinion bearings (9-12). Discard all of these parts.

Figure 22 Pinion Removal

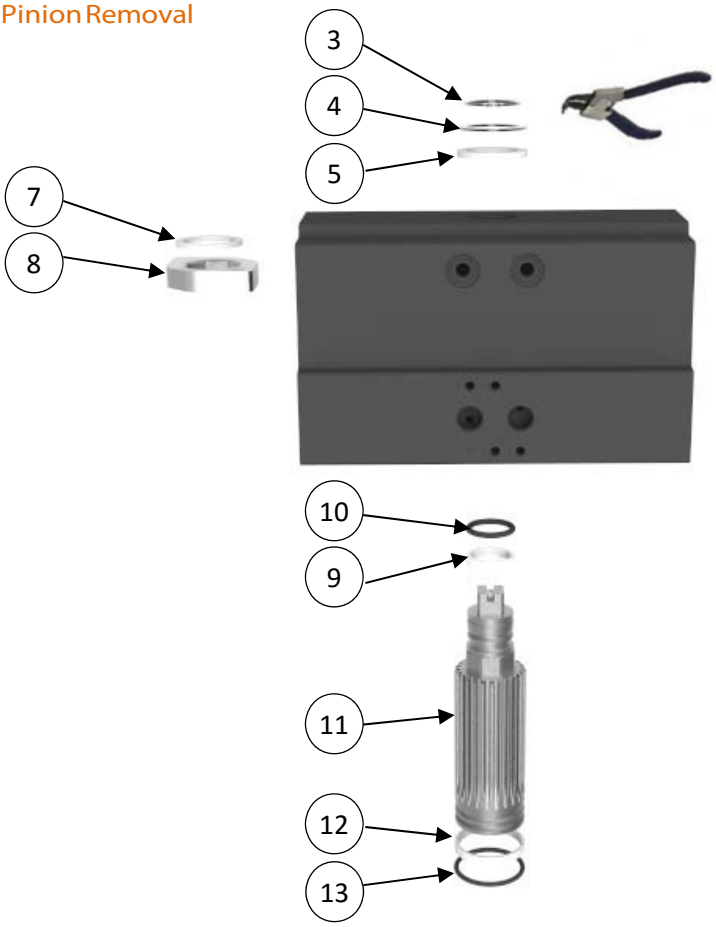

Table 12. Recommended circlip pliers according DIN 5254 (or equal) for shaft circlips.

Actuator size	Pliers according DIN 5254
32-40	10-25mm
52-105	19-60 mm
125-160	40-100 mm
190-300	

8.6 Cleaning the Body

In case of maintenance, use a clean dry cloth and thoroughly wipe clean and remove old grease from:

- The inside and outside of the body including thread holes and crevices/grooves
- The pinion gears
- The pistons

Section 9: Reassembly

This section explains:

- Which parts and how to grease them.
- How to reassemble a complete actuator.
- How to set the stroke adjustment bolts after reassembly.
- How to do a basic function and air leak test.

Tip

The instructions of this section can be used for maintenance or reconfiguration like spring set change or maintenance.

Reference numbers for components refer to the exploded view in section 11.

In case of maintenance, discard all used soft parts like O-ring seals, guide bands and wear strips and circlip and replace them with the parts as supplied in the repair kit.

In case of reconfiguration replace the parts as supplied in the conversion kit (see also chapter 6).

Refer to the Safety Guide for Lifting Instructions.

NOTICE

The actuator is designed to be installed, commissioned and maintained using generic tools like wrenches, Allen keys and screwdrivers.

Refer to the tables in this section or refer to appendix B Tool and Torque tables.

9.1 Grease Instructions

We recommend using a suitable sized paint brush to apply the required amount of grease on the parts as per Table 13 and Figure 23.

Table 13. Grease Instructions

Part		Section of part	Amount of grease
O-rings:	A	Completely	Light film
Housing Parts:	B	Piston bore	Light film
	C	Top pinion bore	Light film
	D	Bottom pinion bore	Light film
Piston Parts:	E	O-ring & bearing groove	Light film
	F	Rack teeth	Half the teeth depth full with grease
	G	Piston bearing	Light film on outside
	H	Piston rack bearing strip	Light film
Pinion Parts:	J	Pinion bottom & O-ring groove	Light film
	K	Pinion top & O-ring groove	Light film
	L	Gear teeth	Half the teeth depth
	M	Pinion top bearing	Light film (inside and out)
	N	Pinion bottom bearing	Light film (inside and out)

Figure 23 Grease Instructions

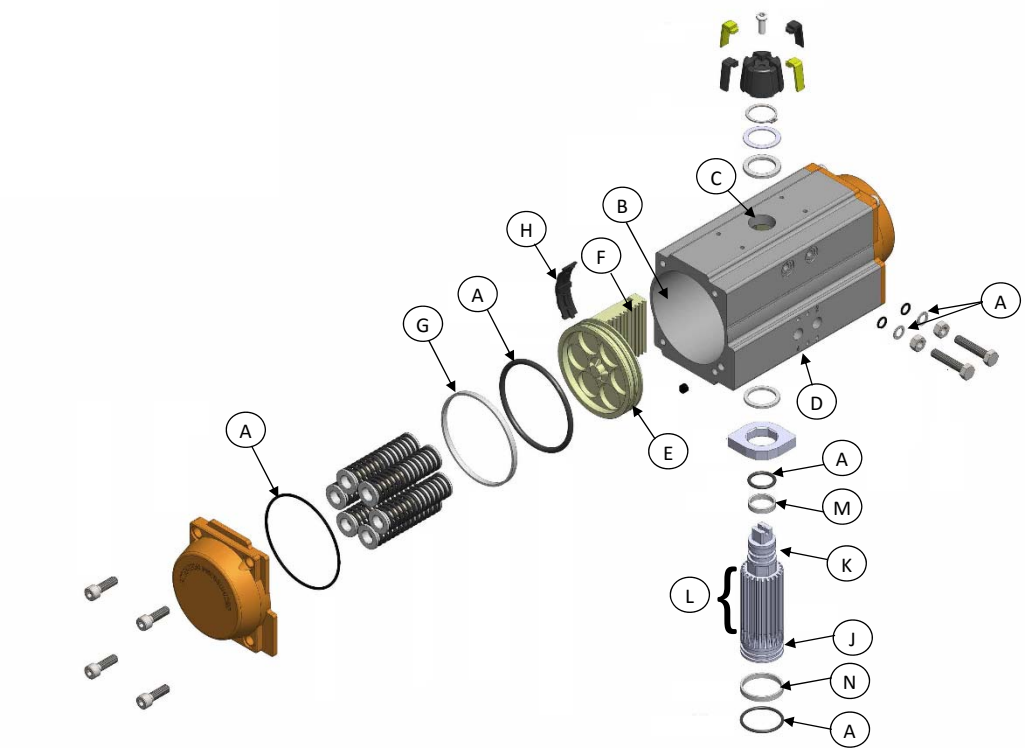

9.2 Reassembly of the pinion

1. Grease the pinion parts according to chapter 9.1.
2. Install the pinion bearings (10-13) and the O-ring seals (9-12) on the pinion (11).
3. While inserting the pinion (11) on the housing install the cam(8) and bearing(7).
4. Install the thrust washers (4-5) and mount the circlip (3) on the pinion top using circlip pliers.
   - Install the new circlip onto its mating groove on the top shaft extension and with the non-sharp edge (B) towards the housing and the sharp edge (A) towards the top of the shaft.

Figure 24 Reassemble the pinion

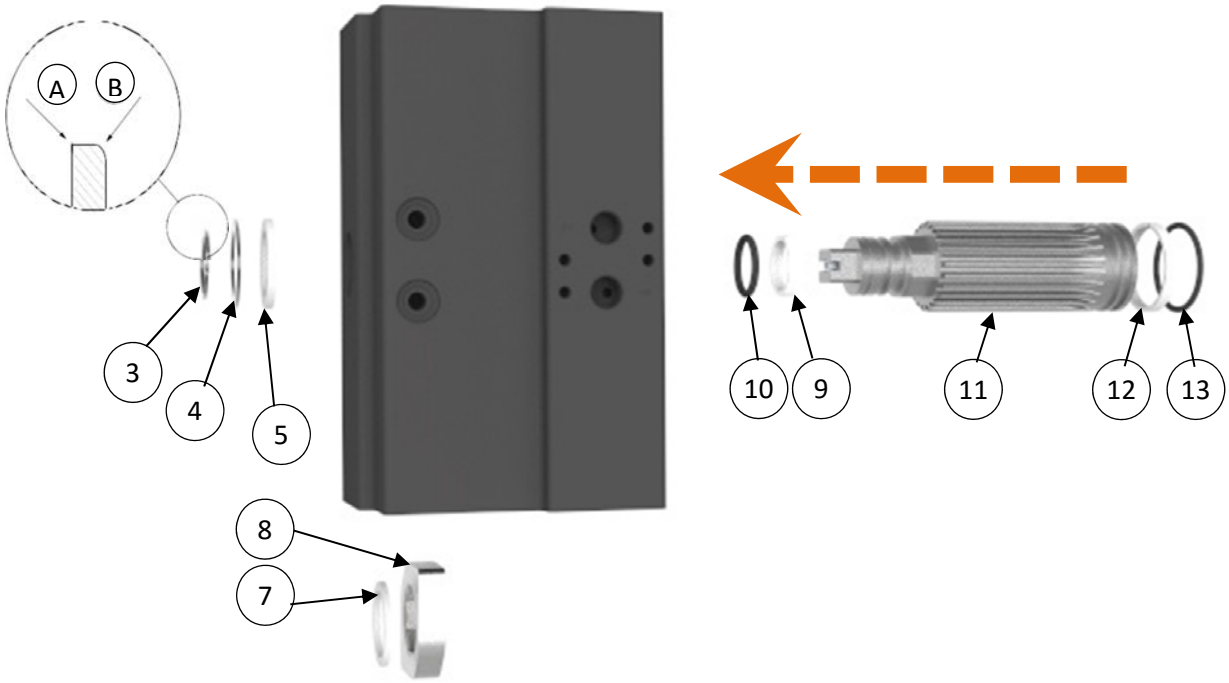

Table 14. Recommended circlip pliers according DIN 5254 (or equal) for shaft circlips.

Actuator size	Pliers according DIN 5254
32-40	10-25mm
52-105	19-60 mm
125-160	40-100 mm
190-300	

9.3 Reassembly of the pistons

NOTICE

Before reassembling the pistons, check the required assembly code (see section 4.2).

1. Grease the piston parts according to step 9.1.
2. Install the piston bearings (22), piston rack bearing strips (20) and piston o-ring seals(21) on the pistons. Ensure all these parts are kept in place during assembly.

Figure 25 Reassemble the pistons

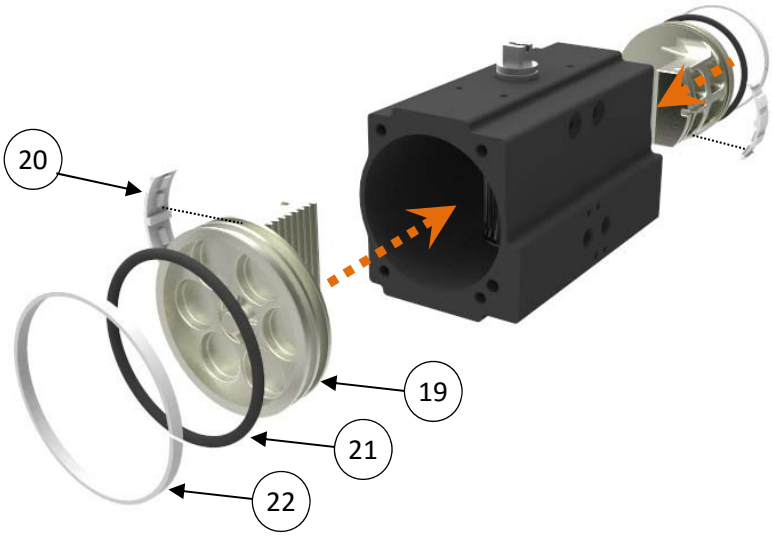

3. Align the pinion (see Figure 26) so that the teeth on the pinion will pick up the pistons rack teeth when turning the pinion. Note the position of the pinion top slot and the cam on the pinion top:
   - For standard or Spring-to-Close: Assembly Code C
   - For reverse or Spring-to-Open: Assembly Code W
4. Slightly push the pinion inward to engage with the pinion.
   - Ensure that smooth movement and 90-degree operation can occur without moving the pistons out of the actuator body.
   - For larger pistons, use a rubber mallet and slightly hitting the pistons inward to engage with the pinion.
5. When the pistons are moved 90° inwards (see figure 26), check that the pinion slot on the pinion top is:
   - Perpendicular to the length centre line of the house for assembly code C.
   - In line to the length centre line of the house for assembly code W.
6. If not, turn pinion to move the pistons outward until they disengage from the pinion. Shift one tooth of the pinion, reassemble and check again.

Figure 26 Position of the slot and the cam on the pinion top

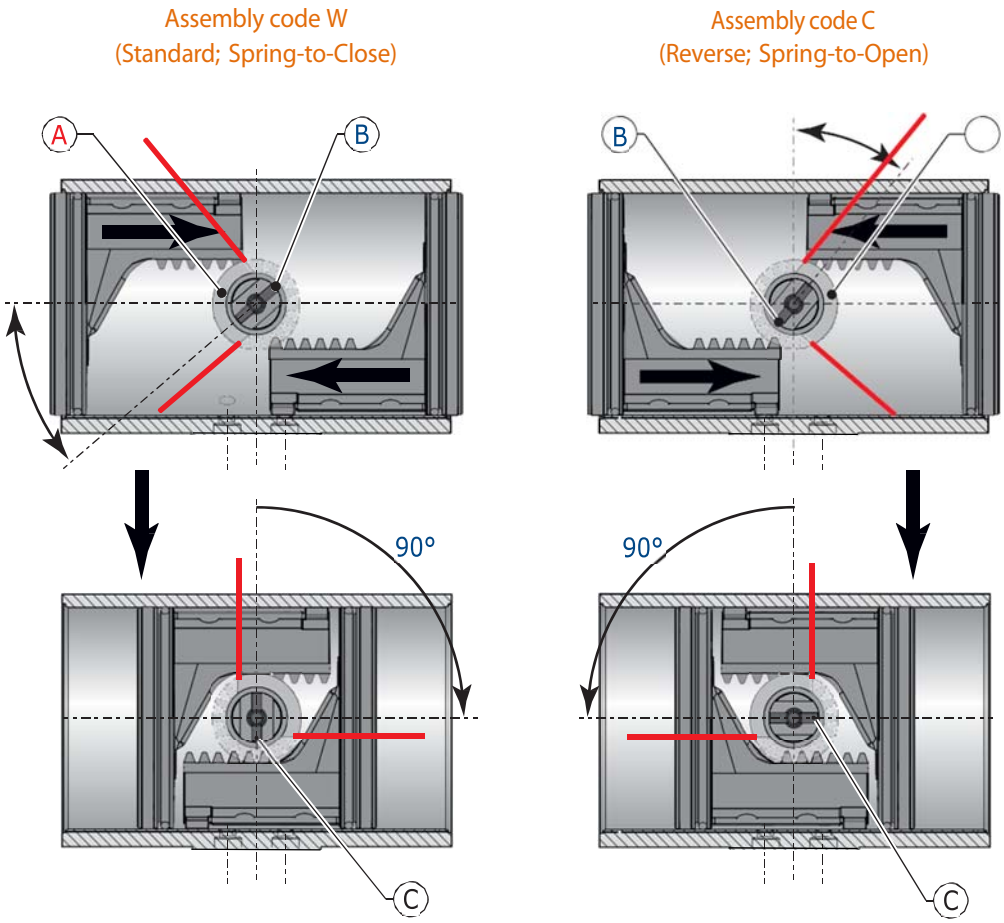

A = Position of cam

B = Position of slot and in dot in pinion

C = Final position of pinion dot

Note:

When the pistons are completely moved inwards, the pinion top will show a 5° over travel.

9.4 Reassembly and settings of the limit stops

1. Install the limit stop screws (18), limit stop nuts (17), limit stop washers (16) and limit stop o-rings (15).

Figure 27 Install Limit Stop Bolts

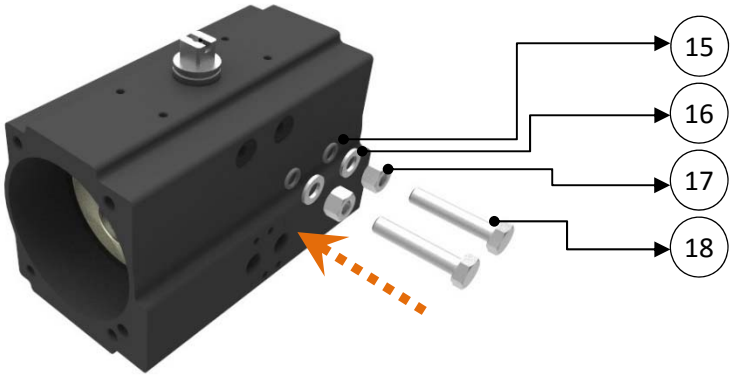

2. Move the pistons inward until the slot in the top of the pinion is perpendicular to centerline of the housing.
3. Double check if the position of the slot and the cam on the pinion top is in the correct position (see figure 26). Screw in the right hand travel stop until it comes into contact with the pinion stop face.
4. Move the pistons outward until the slot in the top of the pinion is in line with the centerline of the housing.
5. Screw in the left hand travel stop until it comes into contact with the pinion stop face.
   - For accurate travel stop adjustment of the actuator on the valve, see section 5.

9.5 Reassembly of the end caps

9.5.1 Double-Acting actuators

1. Grease the O-ring seals (24) and B port seals (14) according to step 9.1.
2. Ensure that O-ring seals (24) and B port seals (14) are kept in place during assembly.
3. Install the end caps (25) and tighten the end cap screws (26). Refer to Table 14 for the correct torque.

Figure 28 Double-acting end cap assembly

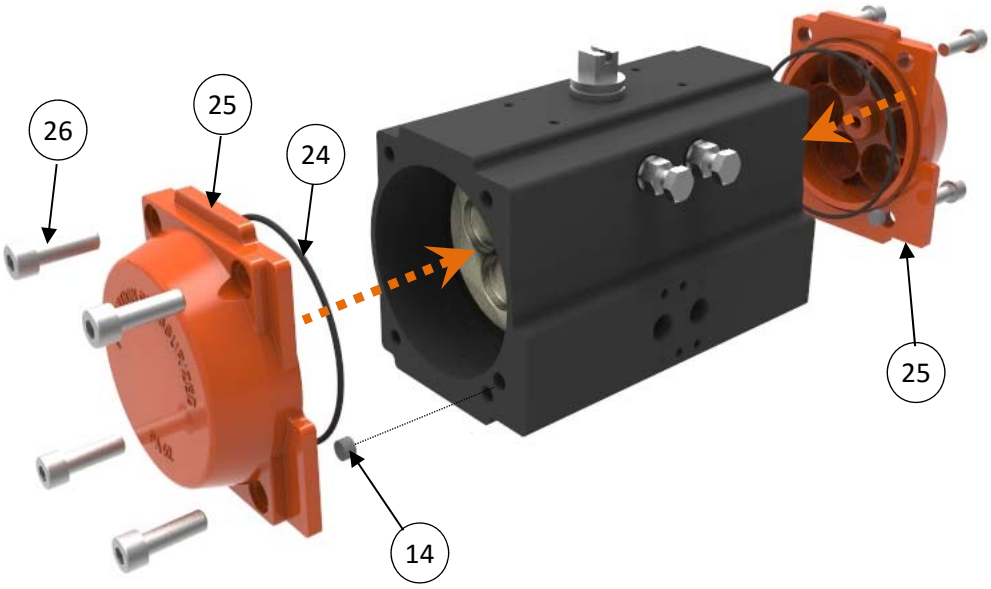

The above end caps (2) are for all Actuator sizes except 32.

End caps (2) for Actuator size 32 have limit stop screwed, flat end caps (see below).

Table 15. End cap Screw Torque

Actuator size	Thread	Tool	Size	Torque (Nm)			Torque (lbf.ft)		
				Target	Min.	Max.	Target	Min.	Max.
32	M4	Allen key	SW 3	1.1	0.8	1.3	0.8	0.6	1.0
40	M5		SW 4	2.0	1.6	3.0	1.5	1.2	2.2
52	M6		SW 5	3.3	2.6	5.1	2.4	1.9	3.8
63	M6		SW 5	3.3	2.6	5.1	2.4	1.9	3.8
75	M6		SW 5	3.3	2.6	5.1	2.4	1.9	3.8
83	M6		SW 5	3.3	2.6	5.1	2.4	1.9	3.8
92	M8		SW 6	8.4	6.7	12.2	6.2	4.9	9.0
105	M8		SW 6	8.4	6.7	12.2	6.2	4.9	9.0
125	M10		SW 8	15.3	12.2	24.8	11.3	9.0	18.3
140	M10		SW 8	15.3	12.2	24.8	11.3	9.0	18.3
160	M12		SW 10						
190, 210, 240, 270, 300									

9.5.2 Spring-Return actuators

Important

When replacing spring cartridges in a spring-return actuator, ensure that the cartridges are replaced in their identical position from where they were removed.

Check below figure to see where to place the spring cartridges in case of spring set conversion.

Before assembling the spring cartridges and end caps, make sure that the pistons are completely inwards.

Figure 29 Spring cartridge placement

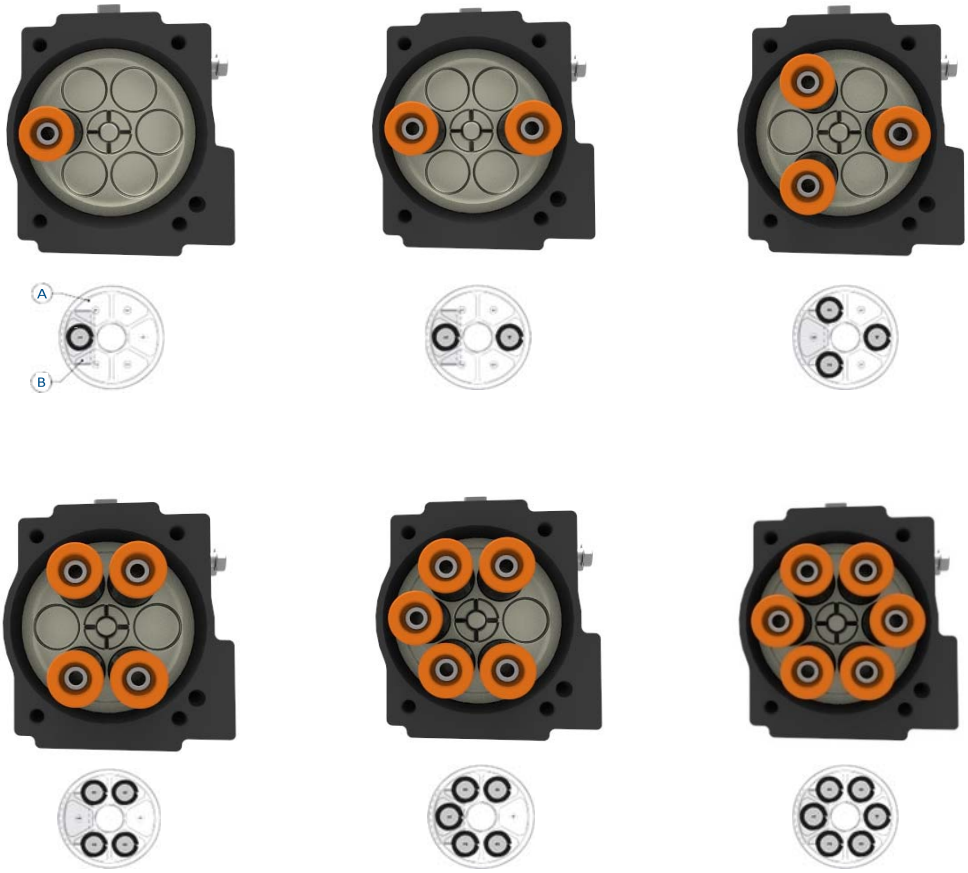

A = Piston top view
B = Position of gear rack

1. Grease the O-ring seals (14) and B port seals (16) according to step 9.1.
2. Ensure that O-ring seals (14) and B port seals are kept in place during assembly.
3. Place the spring cartridges in actuator as per required spring set (see Figure 29).
4. Tighten each end cap screw in small equal turns and in the sequence as per Figure 28. Refer to Table 13 for the correct torque. We recommend to use some grease on the screws for easier fastening.

Figure 30 Spring-return end cap assembly

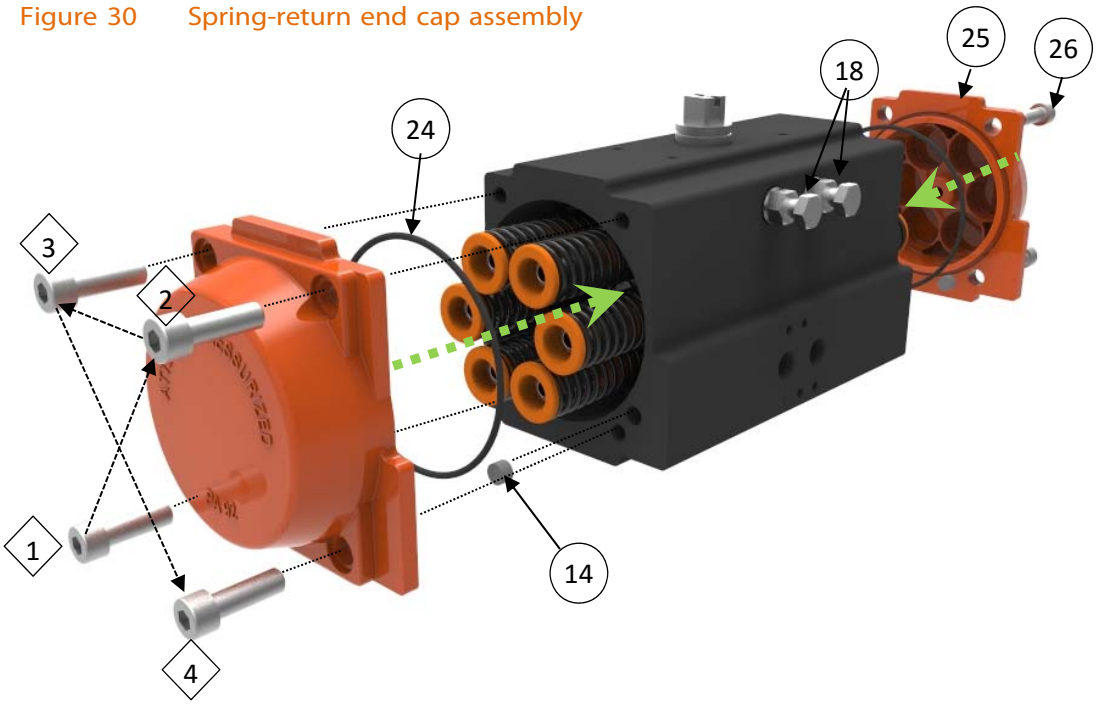

9.6 Basic function and Air Leak Test

⚠ CAUTION - MOVING PARTS

Applying pressure to the actuator will cause the actuator/valve assembly to operate.

1. Apply pressure (max. 8 bar/116 psi) to ports A and B. Use some soap suds at the indicated points: around pinion top (1), pinion bottom (2), the end caps (3) and limit stops (4).
2. In case of leakage around:
   a. The limit stop bolts (and/or the spring-package bolt at spring-return models). Turn the lock nut of the bolts tighter; until the leakage stops.
   b. The end caps: Disassemble the end caps, replace o-rings and reassemble.
   c. The pinion top or bottom and A- or B- port: Disassemble the complete actuator, replace o-rings and reassemble.

Figure 31 Basic function and air leak test

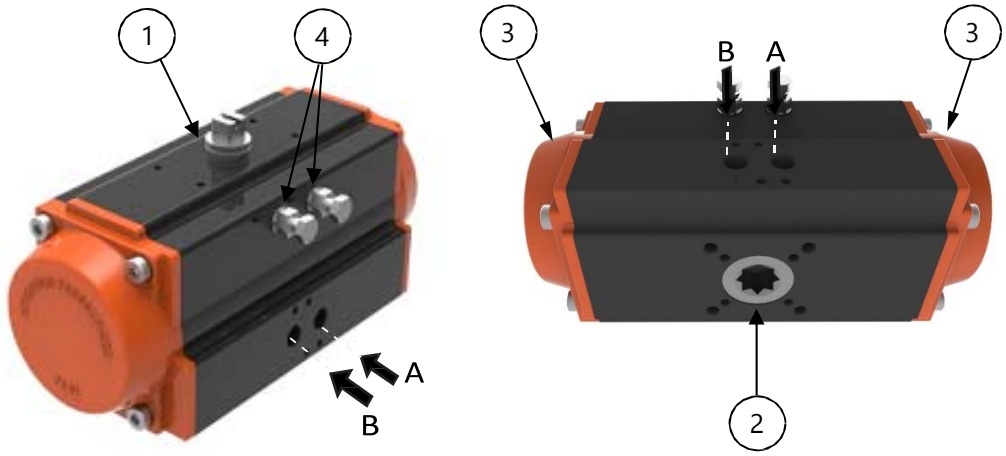

Section 10: Troubleshooting

10.1 Mechanical Problems

Problem	Possible error	Solution	Where to find
Feedback position and actual position are not the same.	Actuator and valve are mounted 90° rotated in relation to each other.	Remove actuator from valve. Check assembly code of actuator. Put both valve and actuator in "Closed" position. Mount actuator on valve.	Section 4
Valve does not reach the completely "Closed" or "Open" position.	Limit stop screws are not set correctly.	Readjust the limit stop screws.	Section 5
	Insert is not mounted properly.	Mount the insert in the right position. Remark: Rotate insert to one cam = 22.5°.	Section 4.5
	Pressure to low.	Apply pressure as per sizing.	
	Sizing is wrong.	Check valve torque data with actuator torque data.	
	Pinion is mounted in the wrong position.	Re assemble actuator.	Section 9
Actuator rotates, valve does not.	No coupling between actuator shaft and valve spindle.	Install a coupling between actuator shaft and valve spindle.	Section 4.5
Actuator does not rotate or does not rotate smoothly.	Broken gearing on pistons or pinion.	Contact nearest PROVAL representative to replace actuator.	
	Spring or Spring cartridge is broken.	Contact nearest PROVAL representative to replace actuator.	Appendix A.
Limit stop screws cannot be turned out anymore.	Limit stop screws is bend.	Contact nearest PROVAL representative to replace actuator.	

10.2 Pneumatic Problems

Problem	Possible error	Solution	Where to find
Actuator does not react to electrical control signal.	There is no supply pressure at the actuator.	Supply the right pressure to the actuator.	Section 2.3 Check that the actual supply pressure is higher than the sizing pressure.
Actuator does not react good to electrical control signal.	There is sufficient supply air pressure but insufficient supply air capacity.	Take care the supply air tubing has the right dimensions.	Section 4.6
	Supply pressure too low, causing pilot operated solenoid valve to fail.	Check that supply pressure at the actuator and solenoid is sufficient to operate the actuator.	Section 2.3 Check that the actual supply pressure is higher than the sizing pressure.
	Solenoid valve is not mounted properly.	Check the solenoid valve mounting.	Instructions shipped with the solenoid
	Speed control throttle (if present) blocks air flow.	Turn the speed control more open.	Instructions shipped with the speed control valve.
	Manual override (if present) on the Solenoid Valve is locked.	Unlock manual override on the solenoid valve.	Instructions shipped with the manual override.
Air leakage between actuator and solenoid valve.	Sealing between solenoid valve and actuator is not mounted air tight.	Reassemble solenoid valve taking care, that all seals are in place.	Instructions shipped with the solenoid valve.
Double-acting actuator will only move to "open" position.	Actuator has wrong solenoid valve configuration.	Mount a solenoid valve suitable for double-acting actuators (5/2 function).	Instructions shipped with the solenoid valve.
		Check that conversion o-ring on solenoids, that have both 3/2 and 5/2 functions, is in the right position.	Instructions shipped with the solenoid valve.
Leakage notice on the actuator.	Seals on the limit stops screws are not air tight.	Turn the lock nut of the bolts tighter; until the leakage stops.	Section 9.6
	Seals on the end caps are not air tight.	Disassemble the end caps, replace O-rings and reassemble. Consider to replace all O-ring seals and bearings.	Section 9.6 or Section 6
	Seals on the pinion top and bottom are not air tight.	Disassemble the complete actuator, replace O-rings and reassemble. Consider to replace all O-ring seals and bearings.	Section 9.6 or Section 6

10.3 Electrical Problems

Problem	Possible error	Solution	Where to find
Actuator does not react to control signals.	Control wiring. Power supply wiring or feedback wiring are not right connected.	Connect all wiring in the right way.	Instructions of the control or feedback accessories
	The power supply voltage is not is not the same as the voltage of the applicable solenoid	Connect the right power supply voltage.	Instructions of the solenoid valve.
There are problems with position feedback after sending the actuator to either the "Open" or "Closed" position.	The wiring of the feedback signals may be switched.	Connect the feedback wiring in the right way.	Instructions of the feedback device.

Section 11: Parts List and Spare Parts Recommendations

11.1 Exploded View and Parts List

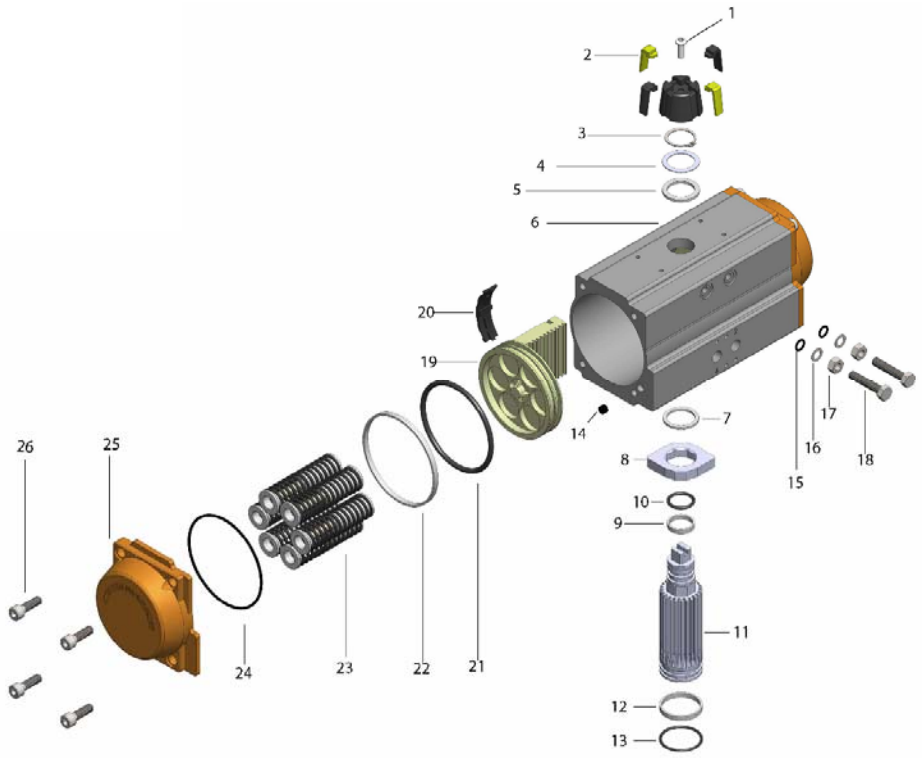

Table 16. Parts List

Pos.	Qty		Description	Material
1	1		Indicator Screw	Stainless Steel
2	1		Indicator	Plastic
3	1	*	Circlip	Stainless Steel
4	1	*	Metal Washer	Stainless Steel
5	1	*	Washer	Engineering Plastics
6	1		Body	Extruded Aluminium Alloy
7	1	*	Inner Washer	Engineering Plastics
8	1		Cam	Alloy Steel
9	1	*	Pinion Upper Bearing	Engineering Plastics
10	1	*	Pinion Upper O-Ring	NBR
11	1		Pinion	Alloy Steel
12	1	*	Pinion Lower Bearing	NBR
13	1	*	Pinion Lower O-Ring	Engineering Plastics
14	2		Sealing Plug	NBR
15	2	*	Adjustment Screw O-Ring	NBR
16	2	*	Washer (Adjustment Bolt)	Stainless Steel
17	2		Nut (Adjustment Bolt)	Stainless Steel
18	2		Stroke Adjustment Bolt	Stainless Steel
19	2		Piston	Aluminium Die Cast
20	2	*	Guide Piston	Engineering Plastics
21	2	*	Piston Bearing	Engineering Plastics
22	2	*	Piston O-Ring	NBR
23	0-12		Cartridge Springs	Spring Steel
24	2	*	End Cap O-Ring	NBR
25	2		End Cap	Cast Aluminium
26	8		Cap Screw	Stainless Steel

* = Included in Service Kit.

Appendix A: Spring load removal

This section explains:

- How to remove the spring load safely of spring-return actuators in case:
  - The valve gets “stuck” in mid position.
  - One of the cartridge spring is broken.

⚠ WARNING - MOVING PARTS

A spring-return actuator mounted on a valve, which is stuck in mid stroke, contains a high spring load which will cause a sudden rotation of the actuator versus the valve during disassembly. This can cause serious injury to personnel or damage to material.

On spring-return actuators with a broken cartridge spring, the end cap can be “shot” away during disassembly of the actuator. This can cause serious injury to personnel or damage to material.

A.1 Spring load relief

⚠ CAUTION - ROTATING ACTUATOR

In case of an actuator/valve assembly “stuck” in mid position, leave the actuator on the valve and/or mounting bracket during this procedure.

Figure A-1 Spring load removal

1. Depressurize the actuator completely.
2. Based on the actuator size, choose the correct sized allen key to unmount end-cap.
3. Gradually turn end-cap screws. Continue this until the load of springs are relieved.
4. Once all four end cap screws have been removed, check cartridge springs. If necessary choose the correct cartridge spring for replacement.
5. Repeat the same procedure for the end cap screws on the other size of the actuator as shown in figure A-1.
6. In case of an actuator/valve assembly “stuck” in mid position: The actuator now can be disassembled from Valve, by removing the mounting studs/bolts.

Appendix B: Tool & Torque Table

This section explains:

- Which tools to use for the indicated fasteners
- The recommended amount of torque to apply on the indicated fasteners.

Table B-1. End cap bolts

Actuator size	Thread	Tool	Size	Torque (Nm)			Torque (lbf.ft)		
				Target	Min.	Max.	Target	Min.	Max.
32	M4	Allen key	SW 3	1.1	0.8	1.3	0.8	0.6	1.0
40	M5		SW 4	2.0	1.6	3.0	1.5	1.2	2.2
52	M6		SW 5	3.3	2.6	5.1	2.4	1.9	3.8
63	M6		SW 5	3.3	2.6	5.1	2.4	1.9	3.8
75	M6		SW 5	3.3	2.6	5.1	2.4	1.9	3.8
83	M6		SW 5	3.3	2.6	5.1	2.4	1.9	3.8
92	M8		SW 6	8.4	6.7	12.2	6.2	4.9	9.0
105	M8		SW 6	8.4	6.7	12.2	6.2	4.9	9.0
125	M10		SW 8	15.3	12.2	24.8	11.3	9.0	18.3
140	M10		SW 8	15.3	12.2	24.8	11.3	9.0	18.3
160	M12		SW 10						
190, 210, 240, 270, 300									

Table B-2. Bottom flange

Actuator Size	ISO Pattern	Torque (Nm)			Torque (lbf.ft)		
		Thread	Min.	Max.	Thread	Min.	Max.
32	F03	M6	4.5	5	10-24UNC	3.3	3.7
40, 52	F03 inner pattern	M5	2.0	3.0	10-24UNC	1.5	2.2
	F05 outer pattern	M6	4.5	5.0	1/4"-20	3.3	3.7
63, 75, 83, 92	F05 inner pattern	M6	4.5	5.0	1/4"-20	3.3	3.7
	F07 outer pattern	M8	10.5	12.5	5/16"-18	7.7	9.2
105, 125	F07 inner pattern	M8	10.5	12.5	5/16"-18	7.7	9.2
	F10 outer pattern	M10	21.0	24.5	3/8"-16	15.5	18.1
140, 160	F10 inner pattern	M10	21.0	24.5	3/8"-16	15.5	18.1
	F12 outer pattern	M12	34.5	43.0	1/2"-13	25.4	31.7
190, 210, 240, 270, 300							

Table B-3. NAMUR (VDE/VDI 3845) flanges

Flange	Metric	Torque (Nm)		Imperial	Torque (lbf.ft)	
	Thread	Min.	Max.	Thread	Min.	Max.
Solenoid flange screw threads	M5	2.0	3.0	10-24UNC	1.5	2.2
Top flange screw threads	M5	2.0	3.0	10-24UNC	1.5	2.2

Table B-4. Limit stop screws and nuts

Actuator size	Thread	Bolt Wrench size (mm)	Nut wrench size (mm)
32	M 5	20(stay bolt)	8
40	M 6	25	10
52	M 6	30	10
63	M 6	30	10
75	M 8	35	13
83	M 8	45	13
92	M 8	40	13
105	M 8	40	13
125	M 10	50	17
140	M 12	60	19
160	M 16	70	24
190, 210, 240, 270, 300			

1. Default dimension according DIN933 standard.
2. Dimensions in brackets according ISO4017 standard.
3. Actuator size 32 is available with end-cap limit stops.

Table B-5. Recommended circlip pliers according DIN 5254 (or equal) for shaft circlips

Actuator size	Pliers according DIN 5254
32-40	10-25mm
52-105	19-60 mm
125-160	40-100 mm
190-300	

Factory offer sales support, service, inventory and commissioning to our global customers. Please contact to our Istanbul Sales Office if you are a domestic customer.

FACTORY

Mermerciler O.S.B.
1. Cad. 32. Sok. No:10
Köseler Köyü 41480
Dilovası/Kocaeli TR
T +90 262 728 1474
F +90 262 728 1477

SALES OFFICE

İMES San. Sit.
A Blok 106 Sok. No:14 .
Y.Dudullu 34776
Ümraniye/İstanbul TR
T +90 216 420 0074
F +90 216 420 0094

For complete list of our products, please visit
www.dorukendustri.com
or contact us at info@dorukendustri.com

www.dorukendustri.com

All Rights Reserved.
We reserve the right to modify or improve the designs or specifications of the products mentioned in this manual at any time without notice. Doruk Endüstri - PROVAL does not assume responsibility for the selection, use or maintenance of any product. Responsibility for proper
selection, use and maintenance of any PROVAL product remains solely with the purchaser.
©2016 Doruk Endüstri Ltd.